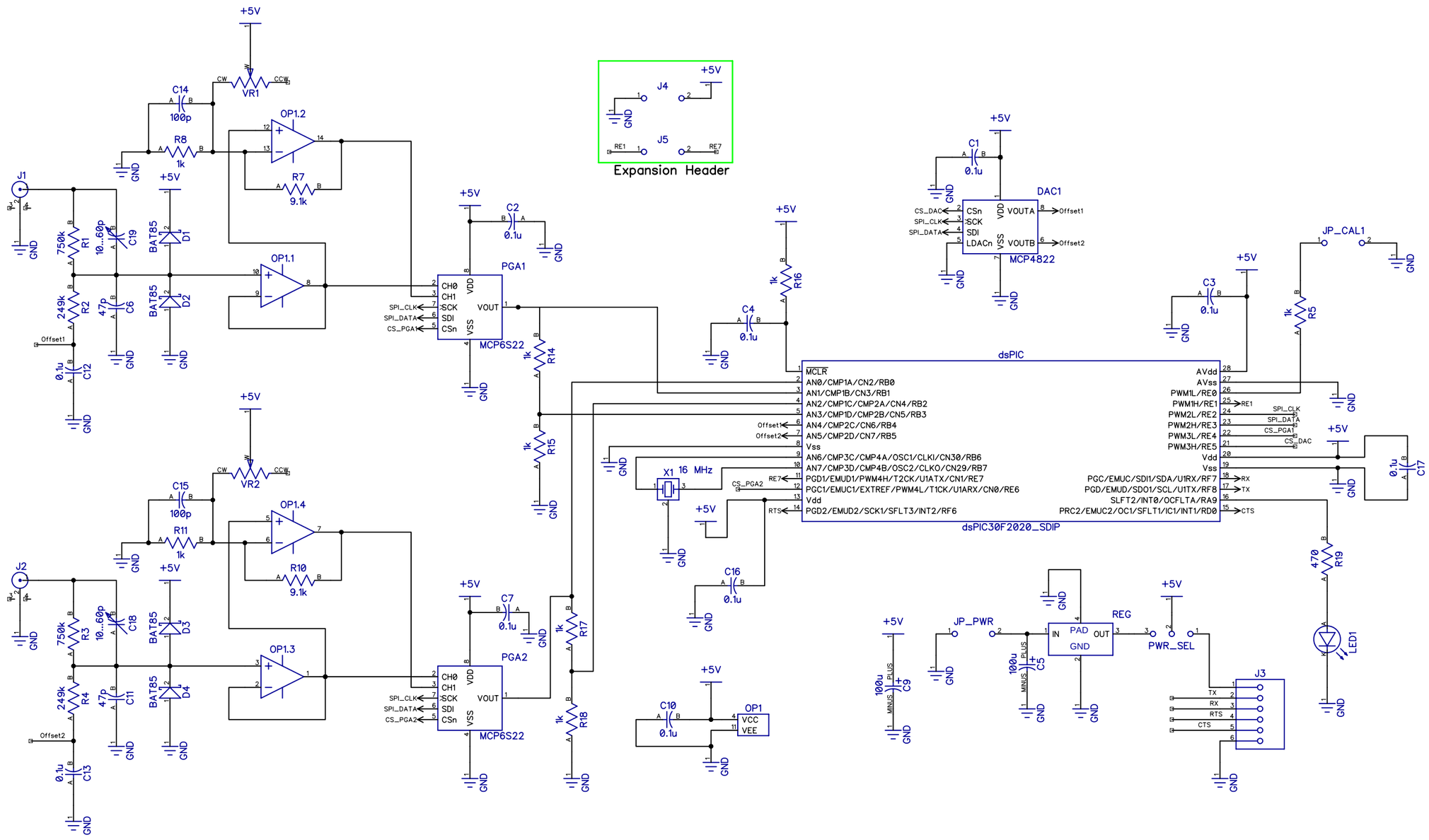
Expansion Header
J4
J5
RE1
RE7
+5V
GND
VR1
VR2
CW
CCW
C14
C15
100p
R8
R11
1k
OP1.2
OP1.1
OP1.4
OP1.3
R7
R10
9.1k
J1
J2
750k
R1
R3
10...60p
C19
C18
BAT85
D1
D2
D3
D4
249k
R2
R4
47p
C6
C11
Offset1
Offset2
0.1u
C12
C13
C2
C7
PGA1
PGA2
CH0
CH1
SCK
SDI
CSn
VDD
VSS
VOUT
SPI_CLK
SPI_DATA
CS_PGA1
CS_PGA2
MCP6S22
R14
R15
R17
R18
C1
C3
C4
C16
C10
0.1u
DAC1
CS_DAC
LDACn
VOUTA
VOUTB
MCP4822
R16
X1
16 MHz
dsPIC
MCLR
AN0/CMP1A/CN2/RB0
AN1/CMP1B/CN3/RB1
AN2/CMP1C/CMP2A/CN4/RB2
AN3/CMP1D/CMP2B/CN5/RB3
AN4/CMP2C/CN6/RB4
AN5/CMP2D/CN7/RB5
Vss
AN6/CMP3C/CMP4A/OSC1/CLKI/CN30/RB6
AN7/CMP3D/CMP4B/OSC2/CLKO/CN29/RB7
PGD1/EMUD1/PWM4H/T2CK/U1ATX/CN1/RE7
PGC1/EMUC1/EXTREF/PWM4L/T1CK/U1ARX/CN0/RE6
Vdd
PGD2/EMUD2/SCK1/SFLT3/INT2/RF6
AVdd
AVss
PWM1L/RE0
PWM1H/RE1
PWM2L/RE2
PWM2H/RE3
PWM3L/RE4
PWM3H/RE5
PGC/EMUC/SDI1/SDA/U1RX/RF7
PGD/EMUD/SDO1/SCL/U1TX/RF8
SLFT2/INT0/OCFLTA/RA9
PRC2/EMUC2/OC1/SFLT1/IC1/INT1/RD0
RX
TX
RTS
CTS
dsPIC30F2020_SDIP
JP_CAL1
C17
R5
R19
LED1
C9
C5
JP_PWR
REG
PAD
OUT
PWR_SEL
J3
OP1
VCC
VEE
PLUS
MINUS