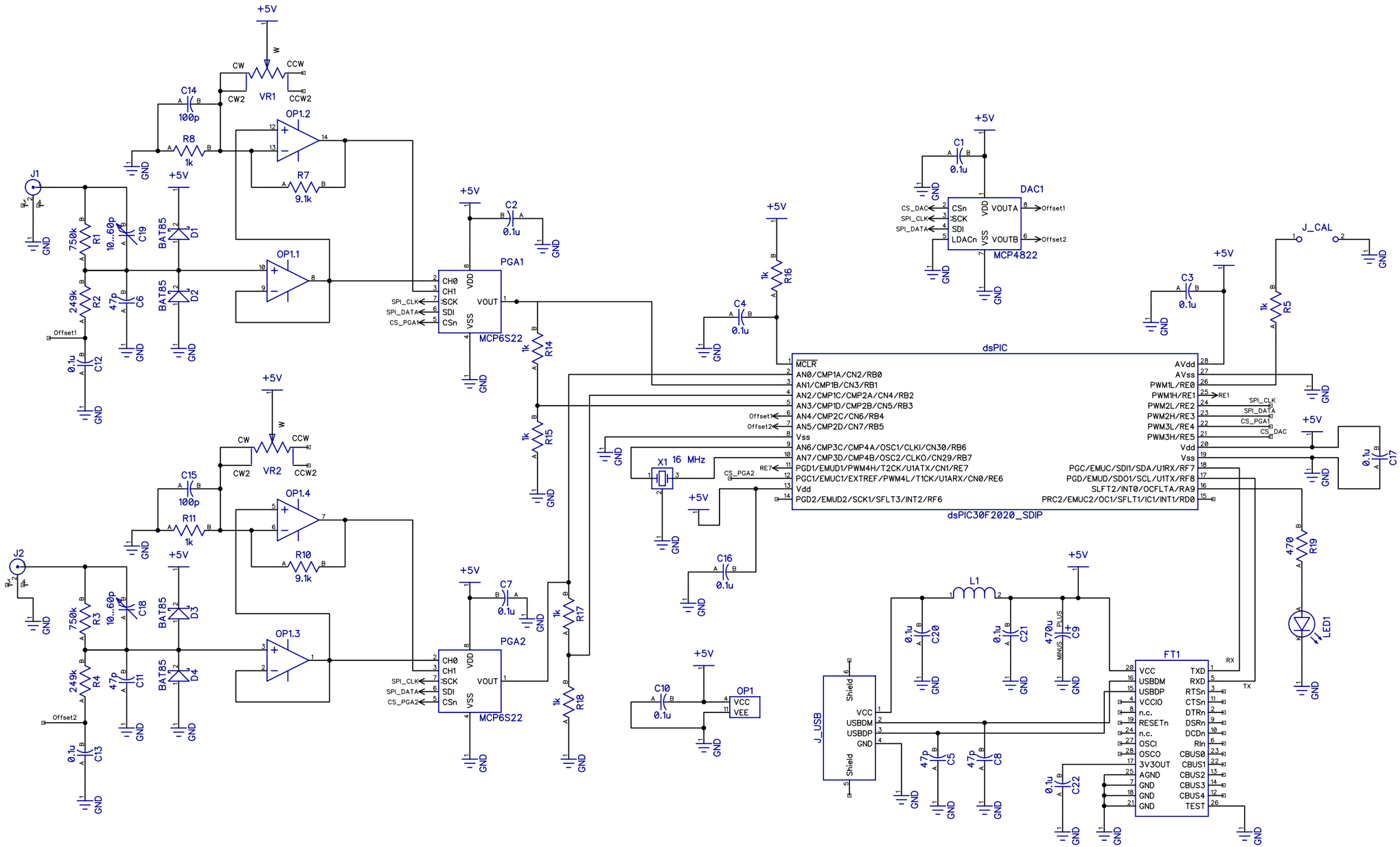
+5V
VR1
CW
CCW
CW2
CCW2
C14
100p
OP1.2
R8
1k
R7
9.1k
GND
J1
750k
R1
10...60p
C19
BAT85
D1
D2
249k
R2
47p
C6
Offset1
0.1u
C12
OP1.1
C2
PGA1
CH0
CH1
SCK
SDI
CSn
VDD
VOUT
VSS
MCP6S22
SPI_CLK
SPI_DATA
CS_PGA1
R14
R15
C1
DAC1
CSn
SCK
SDI
LDACn
VOUTA
VOUTB
MCP4822
CS_DAC
Offset1
Offset2
R16
C4
C3
J_CAL
R5
dsPIC
MCLR
AN0/CMP1A/CN2/RB0
AN1/CMP1B/CN3/RB1
AN2/CMP1C/CMP2A/CN4/RB2
AN3/CMP1D/CMP2B/CN5/RB3
AN4/CMP2C/CN6/RB4
AN5/CMP2D/CN7/RB5
Vss
AN6/CMP3C/CMP4A/OSC1/CLKI/CN30/RB6
AN7/CMP3D/CMP4B/OSC2/CLKO/CN29/RB7
PGD1/EMUD1/PWM4H/T2CK/U1ATX/CN1/RE7
PGC1/EMUC1/EXTREF/PWM4L/T1CK/U1ARX/CN0/RE6
Vdd
PGD2/EMUD2/SCK1/SFLT3/INT2/RF6
AVdd
AVss
PWM1L/RE0
PWM1H/RE1
PWM2L/RE2
PWM2H/RE3
PWM3L/RE4
PWM3H/RE5
Vdd
Vss
PGC/EMUC/SDI1/SDA/U1RX/RF7
PGD/EMUD/SDO1/SCL/U1TX/RF8
SLFT2/INT0/OCFLTA/RA9
PRC2/EMUC2/OC1/SFLT1/IC1/INT1/RD0
dsPIC30F2020_SDIP
X1
16 MHz
RE7
CS_PGA2
C16
C17
R19
LED1
VR2
C15
OP1.4
R11
R10
J2
R3
C18
R4
C11
C13
OP1.3
C7
PGA2
R17
R18
C10
OP1
VCC
VEE
J_USB
Shield
USBDM
USBDP
L1
C20
C21
470u
C9
PLUS
MINUS
C5
C8
C22
FT1
VCCIO
n.c.
RESETn
OSCI
OSCO
3V3OUT
AGND
TXD
RXD
RTSn
CTSn
DTRn
DSRn
DCDn
RIn
CBUS0
CBUS1
CBUS2
CBUS3
CBUS4
TEST
RX
TX